Short communication

Tendon Injuries of the Hand in Kirikkale, Turkey

Elif Sari*

Department of Plastic, Reconstructive and Aesthetic Surgery, Faculty of Medicine, Kirikkale University, Kirikkale, Turkey

ABSTRACT

BACKGROUND

Tendon injuries are one of the most common injuries of the hand and challenging problems in trauma surgery. They usually require surgical repair and unlike the single tendon injuries, flexor tendon injuries have higher morbidities when accompanied with nerve injuries. In the present study, I aimed to report the clinical experiences and outcomes about tendon injuries.

METHODS

A total of 180 patients (149 males, 31 females) between 17 and 56 years old were operated in the clinic due to tendon injury. Seventy isolated extensor tendon injuries, 60 isolated flexor tendon injuries, 30 multiple flexor tendon and major nerve injuries, 18 combined extensor and flexor tendon injuries, and 2 combined extensor, flexor and major nerve injuries were treated. All patients were admitted to the clinic in acute phase and operated immediately. Physiotherapy was started in the third day of the operation.

RESULTS

Patients were followed up between 6 and 18 months (mean 12.4 months). There was not any major complications except one female patient (0.5%) who did not conform to the treatment protocol after flexor tendon injury. Fifteen patients (8.5%) had poor flexor range of motion. The other patients were healed uneventfully.

CONCLUSION

Tendon healing may cause some complications from mild to severe degrees. However, atraumatic surgery and a comprehensive postoperative early physiotherapy could decrease these complication rates.

KEYWORDS

Tendon; Hand; Injury; Physiotherapy

***Corresponding Author:**
Elif Sari, MD;
Department of Plastic, Reconstructive and Aesthetic Surgery,
Faculty of Medicine,
Kirikkale University,
Ankara-Kirikkale Road, 7th km Yahsihan, 71450,
Kirikkale, Turkey.
Tel: +90-506-3813703
Fax: +90-580-2252819
E-mail: drelifsanli@hotmail.com
Received: May 19, 2015
Revised: September 17, 2015
Accepted: October 3, 2015

Please cite this paper as:
Sari E. Tendon Injuries of the Hand in Kirikkale, Turkey. World J Plast Surg 2016;5(2):160-167.

INTRODUCTION

Hand is a social organ and in the center of the daily activities. Tendons are major structures of the hand that provide movement of the fingers. They are composed of approximately 90% to 95% of tenoblasts and tenocytes.[1] They are covered with epitenon which contains vascular, nerve and lymphatic supply to the tendon[2] and stabilized with pulley systems. Tendon injuries are the second

[Downloaded from wjps.ir on 2026-11-24]

position in hand injuries, but they play a key role in hand function and their injuries are still a challange in hand surgery.[3]

New tendon repair techniques were commonly reported in the literature, but a few of them became standart practical method, and overall outcomes have not changed dramatically yet.

Lister *et al.*[4] reported a two-strand method with Kleinert type rehabilitation and had 75% good results in zone 2 flexor tendon injuries. Moreover, Sandow *et al.*[5] showed 71% good to excellent functions in 73 tendon injuries with four-strand repair and early active motion.

Tendon healing and postoperative hand function are dependent on several factors such as wound healing capacity, smoking habitude, drugs, and also tendon repair technique, suture material and repair geometry.[6] Independently of patient's factors, comperative studies have shown that Ethibond (Ethicon, Inc., Somerville, NJ, USA) is the strongest nonmetal suture.[7] It was shown that multiple strand repairs provide 20 to 30 N of extra strength,[8] asymmetrically repair is more effective than symmetrical ones,[9] and finishing the repair with epitendinous sutures is safer than core suture alone.[6] In this report, I aimed to share the clinical experiences about tendon repair and to discuss the surgical and rehabilitation methods in the light of the literature.

MATERIALS AND METHODS

Patients operated for tendon injuries were collected retrospectively in the clinic and analyzed.

Patients who were not between 18 and 60 years old, had bone fractures or pulley rupture at the injury sites, had partial tendon injuries 1 and zone 1 extensor tendon injuries, and had secondary illnesses such as diabetes mellitus were not included in to the present study.

In the clinic, a two-strand asymmetrical modified Kessler repair was favored (Figure 1). I advocate approximately 7 mm bite from the tendon ends based of the findings of Kim *et al.*[10] I used 4/0 propilene in tendons which were equal to or thinner than 4 mm, and 3/0 propylene which were thicker than 4 mm ones. I performed 6/0 propylene for asymmetrical epitendinous sutures to stabilize the repair zone (Figures 2-4).

Both extensor and flexor tendons were operated with modified Kessler technique and Z plasties were added to the annular pulleys if it was necessary. Flexor (Kleinert) and extensor (15 degree extension of the wrist and full extension of the metacarpophalangeal and interphalangeal joints) splints were prepared for each kind of injury. I offerred resting splint in the combination of both flexor and extensor tendon injuries.

Physiotherapy was started in the third day of the operation in the injuries of both type of tendons. In flexor tendon injuries, early passive flexion and extension were started. At the day of 10, I offered active flexion and extension under the guidance of a physiotherapist. Wrist and metacarpophalangial extension were added to this regimen at the day of 15. If tendon injury included major nerve injury, I delayed active wrist extension at the day of 20. However, I advocated to start nerve stumilation program

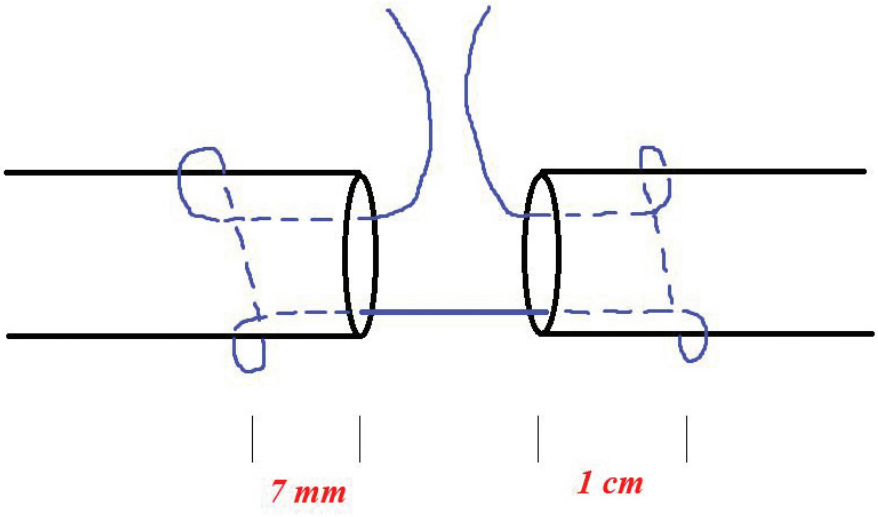

Fig. 1. Shematic description of the asymmetrical modified Kessler repair technique.

[Downloaded from wjps.ir on 2026-11-24]



Fig. 2. A 35 years old male patient with 4th and 5th deep and superficial flexor tendon sharp injuries. It demostrates intraoperative repair with modified Kessler technique. A2 pulleys were protected during surgery.

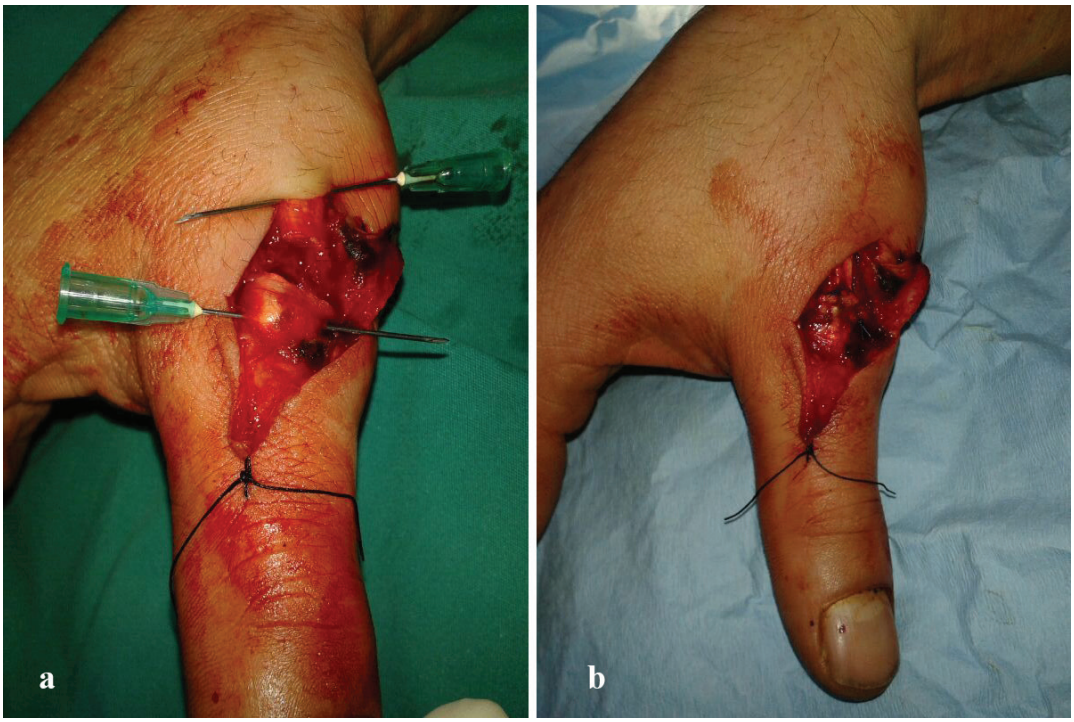

Figs. 3. a: A 25 years old male patient with extensor pollicis longus injury. **b:** was taken after surgical repair.

by a physiotherapist at the 3rd day. If patient was conscious, these processes were taken 3 to 5 days forward. Splint was taken at the end of the first month. In extensor tendon injuries, early passive extension was started at the 3rd day and replaced with active extension at the day of 7. Interphalangeal and metacarpophalangeal joint flexions were offered at the 20th day. At the end of one month splint was taken from the patient.

Normal range of motions were assigned from contralateral extremity. Lower than 50% of normal range of motion was detected as poor result. Improvement in range of motion equal to or over 50% was detected as good, and 90 to 100% as excellent result.

RESULTS

A total of 180 patients aged between 17 and 56 years old were collected retrospectively. From

[Downloaded from wjps.ir on 2026-11-24]



Figs. 4. **a:** A 39 years old female patient with extensor tendon injury. **b:** demonstrates the exploration of the proximal and distal ends of the tendon. **c:** was taken after repair.

all patients, 149 were male and 31 were female. Seventy isolated extensor tendon injuries, 60 isolated flexor tendon injuries, 30 multiple flexor tendon and major nerve injuries, 18 combined extensor and flexor tendon injuries, and 2 combined extensor, flexor and major nerve injuries that were treated in the center were enrolled. There was not any deep radial nerve injury in the series.

All patients were were admitted to the clinic in acute phase and operated immediately. I revisited patients from 6 to 18 months (mean 12.4 months). One female patient (0.5%) used her hand at the postoperative 3rd day and was admitted to the clinic with tendon rupture. Reoperation was offered but it was not accepted by the patient. Poor flexion was detected in 15 (8.5%) smoker male patients. Ten of them had combined flexor tendon and major nerve injuries and five of them were not able to join the physiotherapy program because of their residences. Any other complications were not seen in the patients. All of them healed with good to excellent results (Figures 5-7).

DISCUSSION

According to the clinical experiences, I confirmed primary tendon repair as quick as possible. Each passing day can cause proximal tendon swelling, tendon contraction and muscle fibrosis that prevents primary repair. If wound is contaminated or a tendon defect is detected, secondary repair could be performed at the injury site.[11] In the present study, all patients were operated immediately after the injury.

Tendon exposure may be done with Brunner's zig-zag approach[12] as in the clinic or midlateral incision.[13] I preferred zig-zag incision because it allows a comprehensive exposure on both tendons and neurovascular bundles in the fingers. Moreover, this technique did not cause any skin contracture in the patients. I did not have a tendon retriever, so I pulled the tendon with an atraumatic clamp. If I was not able to find the proximal end of the tendon with this technique, I advocated retrieval of the proximal part with a cannule passing through the tunnel.

Several techniques have been tried for a

[Downloaded from wjps.ir on 2026-11-24]



Figs. 5. a: A 27 years old male patient with multiple extensor tendon injury at the level of Forearm. **b:** is intraoperative. **c and d:** are postoperative 12 months view of the scar. Full extension of the fingers could be seen in these figures.



Figs. 6. a: A 37 years old male patient with both flexor and extensor tendon and superficial radial nerve injuries. **b and c:** are postoperative 14 months views, full extension could be seen in these figures.

strong tendon healing. Wu *et al.* discussed these methods and supported multistrand repairs more than double-strand repair.[8] The Savage six-strand repair[14] may give 81% good or excellent results. However, this complex technique has not become popular in the practice. Eight-strand repair has also been compaired with Savage, two-strand Kessler and Tajima techniques and was found to have superior strength.[15]

I used two-strand asymmetrical modified Kessler repair with no gapping at the repair site. I think that more strand may cause foreign material reaction at the repair site and delay tendon healing. Moreover, some studies supported the hypothesis that two-strand repairs and early active mobilization could achieve good results with low rupture rates.[16-20] Geometry of the sutures are also important for ideal repair.[21] I preferred to place the core suture asymmetrically to the tendon ends. I aggree that asymmetric

[Downloaded from wjps.ir on 2026-11-24]

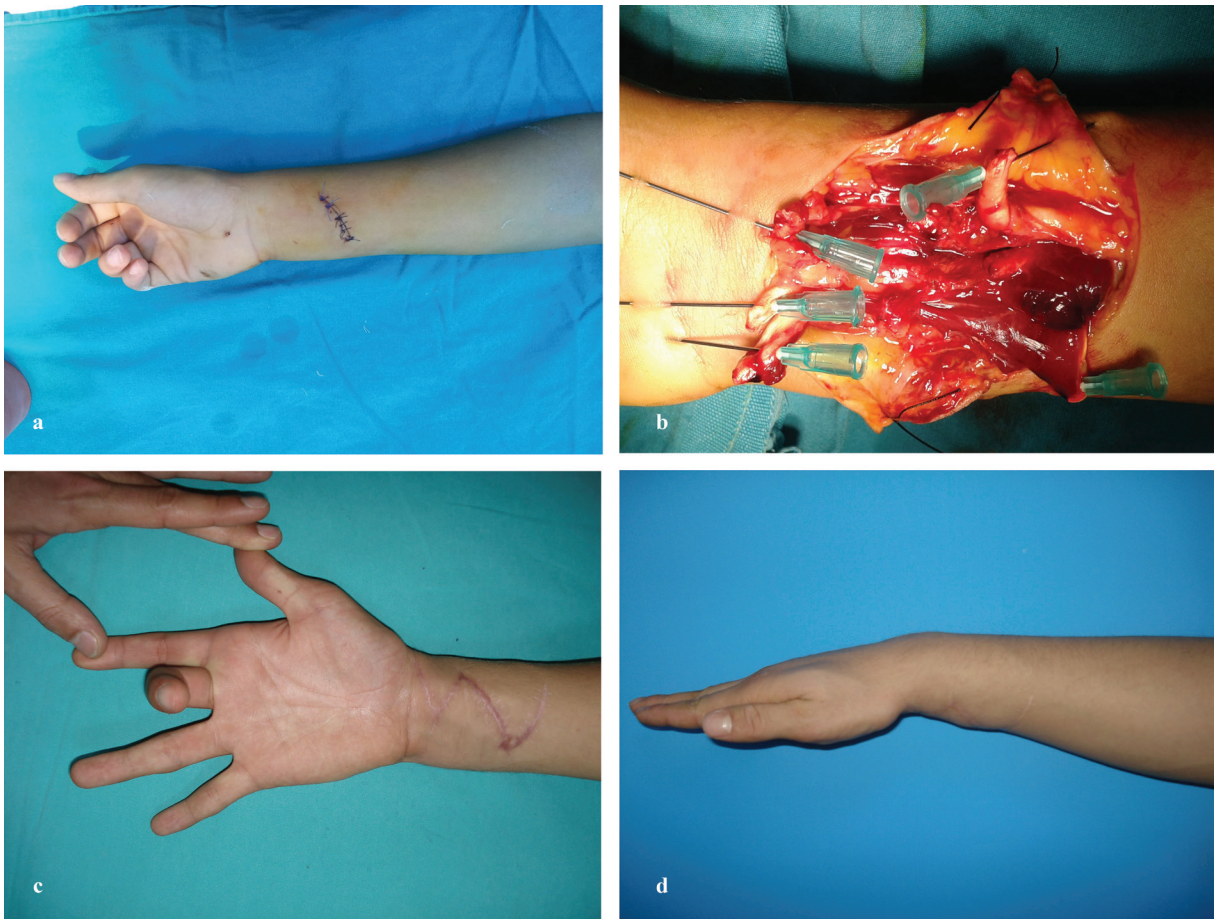

Figs. 7. a: Preoperative picture of 20 years old male patient with 1st, 2nd, and 3rd flexor tendons, palmaris longus, flexor carpi radialis, partial median nerve injuries. **b:** is intraoperative. **c and d:** are postoperative 12 months photos of active range of motion of the hand.

geometry may transport the load more affectively compared with symmetrical geometry.[9]

Placement of the knot inside the repairs were significantly stronger in comparison to outside of placed knots in vivo but ex vivo demonstrated that outside, placed knots increased the strength.[21] I recommended to place the knot outside of the repair zone when tendon thickness is equal to or lower than 3 mm such as extensor digiti minimi tendon and I also prefer inside placed knot when tendon thickness is more than 3 mm.

The type of the suture material is also important in tendon repair to achive good results. They should be strong, minimally reactive, and easy to handle and knot.[22] Comprehensive studies have shown that stainless steels were the strongest ones, followed by fiber wire (Arthrex, Inc., Naples, FL, USA), then Ethibond (Ethicon, Inc., Somerville, NJ, USA), then propylene, and finally Nylon (Ethicon, Inc., Somerville, NJ, USA).[7] I preferred to use propylene in the clinic and arranged the suture size according to the tendon's thickness.

Tendons that are equal or thinner than 4 mm were repaired with 4/0 propylene, thicker than 4 mm ones are repaired with 3/0 propylene suture. Epitendinous sutures also support the repair zone when placed asymmetrically. After the tendon repair, I tested the finger's passive range of motion, especially in flexor tendon injuries. If pulleys restricted the flexion, they could be partially released by Z-plasty. Otherwise, they should always be protected.

Rehabilitation of tendons are one of the key elements of the perfect result. It has been shown that motion faciliated a reduction in inflammation,[23] up-regulation of collagen synthesis,[24] deposition of large-diameter fibrils,[25] and alignment of collagen bundles.[26] A total of fifteen articles between 1970 and 2009 were reviewed and it was found that rupture rates were lowest in combined therapy regimes (controlled passive motion and passive flexion, active extension Kleinert- Duran). However, best functional results were detected in early active mobilization or combined Kleinert and

[Downloaded from wjps.ir on 2026-11-24]

Duran protocols.[27]

I preferred different rehabilitation protocols according to the patient's compliance to the rehabilitation program, type of injury and accompanying nerve injury. Physiotherapy could be started in the third day of the operation in injuries of both type of tendons. In flexor tendon injuries, early passive flexion and extension could be started and continued with active extension and passive flexion. At the day of 10, I offerred active flexion and extension under the guidance of a physiotherapist.

Wrist and metacarpophalangial extension could be added to this regimen at the day of 15. If tendon injury includes major nerve injury, I could delay active wrist extension at the day of 20. However, I advocated to start nerve stumilation at the 3rd day. If the patient was conscious, these processes could be taken 3 to 5 days forward. Splint could be taken at the end of the first month. In extensor tendon injuries, early passive extenson could be started at the 3rd day and could be replaced with active extension at the day of 7.

Interphalangeal and metacarpophalangeal joint flexion was offered at the 20th day. At the end of one month splint could be taken from the patient. The Manchester short splint could be used for active range of motion exercises but the patients that were not able to use it cautiously. Therefore, I decided to return the classical rehabilitation method. Despite a wide variety of researches about tendon injuries, there are still several complications that can occur after tendon repair such as adhesion formation, rupture and stiffness of the joints.[11]

Tendon rupture is an unfortunate complication following surgery, as it requires secondary repair. It usually occurs in 3-9% of cases.[28] In the data, tendon rupture rate was lower, only in one patient (0.5%) who did not obey the rehabilitation rules. Avoidance from adhesions (20% in literature) was not easy, but tenolysis is still an excellent salvage way to release the tendon.[29] Moreover, some biological methods were experienced for the treatment of adhesions; including 5-fluorouracil,[30] but they are still under investigation.

Fifteen patients (8.5%) were admitted to the clinic with poor flexion range of motions. Joint stiffness were detected in five of them who did not follow the rehabilitation program and the others had accompanying major nerve injury. Extensor tendons healed uneventfully. I think that the promising results received their powers from early, asymmetrical tendon repair and early rehabilitation. Although there are several studies about tendon surgery that provide advancements in tendon repair, and there is still a defect in treatment modalities. Further comprehensive studies about tendon surgery and rehabilitation are needed to be done in the future.

CONFLICT OF INTEREST

The authors declare no conflict of interest.

REFERENCES

1 Kannus P, Jozsa L, Jarvinnen M. Basic science of tendons. In: Garrett WE Jr, Speer KP, Kirkendall DT, Eds. Principles and practice of orthopaedic sports medicine. Philadelphia: Lippincott Williams and Wilkins, 2000; pp. 21-37.

2 Jozsa LG, Kannus P. Spontaneous rupture of tendons. In: Jozsa LG, Kannus P, Eds. Human tendons: anatomy, physiology, and pathology. Champaign, IL: Human Kinetics. 1997; pp. 254-325.

3 Schöffl V, Heid A, Küpper T. Tendon injuries of the hand. *World J Orthop* 2012;**3**:62-9.

4 Lister GD, Kleinert HE, Kutz JE, Atasoy E. Primary flexor tendon repair followed by immediate controlled mobilization. *J Hand Surg Am* 1977;**2**:441–51.

5 Sandow MJ, McMahon M. Active mobilisation following single cross grasp four strand flexor tenorrhaphy (Adelaide repair). *J Hand Surg Eur* 2011;**36**:467–75.

6 de Wit T, Walbeehm ET, Hovius SE, McGrouther DA. The mechanical interaction between three geometric types of nylon core suture and a running epitenon suture in repair of porcine flexor tendons. *J Hand Surg Eur* 2013;**38**:788–94.

7 Lawrence TM, Davis TR. A biomechanical analysis of suture materials and their influence on a four-strand flexor tendon repair. *J Hand Surg Am* 2005;**30**:836–41.

8 Wu YF, Tang JB. Recent developments in flexor tendon repair techniques and factors influencing strength of the tendon repair. *J Hand Surg Eur* 2014;**39**:6–19.

9 Wu YF, Tang JB. The effect of asymmetric core suture purchase on gap resistance of

[Downloaded from wjps.ir on 2026-11-24]

tendon repair in linear cyclic loading. *J Hand Surg Am* 2014;**39**:910–18.
10 Kim JB, de Wit T, Hovius SE, McGrouther DA, Walbeehm ET. What is the significance of tendon suture purchase? *J Hand Surg Eur* 2009;**34**:497–502.
11 Ting J. Tendon injuries across the world. *Injury* 2006;**37**:1036-42.
12 Bruner JM. The zig-zag volar-digital incision 1 for flexor-tendon surgery. *Plast Reconstr Surg* 1967;**40**:571–4.
13 Hall RF Jr, Vliegenthart DH. A modified midlateral incision for volar approach to the digit. *J Hand Surg Br* 1986;**11**:195–7.
14 Savage R. In vitro studies of a new method of flexor tendon repair. *J Hand Surg Br* 1985;**10**:135–141.
15 Winters SC, Gelberman RH, Woo SL, Chan SS, Grewal R, Seiler JG 3rd. The effects of multiple- strand suture methods on the strength and excursion of repaired intrasynovial flexor tendons: a biomechanical study in dogs. *J Hand Surg* 1998;**23**:97-104.
16 Bainbridge LC, Robertson C, Gillies D, Elliot D. A comparison of post-operative mobilization of flexor tendon repairs with "passive flexion-active extension" and "controlled active motion" techniques. *J Hand Surg Br* 1994;**19**:517–21.
17 Kitis PT, Buker N, Kara IG. Comparison of two methods of controlled mobilisation of repaired flexor tendons in zone 2. *Scand J Plast Reconstr Surg Hand Surg* 2009;**43**:160–5.
18 Saldana MJ, Chow JA, Gerbino P II, Westerbeck P, Schacherer TG. Further experience in rehabilitation of zone II flexor tendon repair with dynamic traction splinting. *Plast Reconstr Surg* 1991;**87**:543–6.
19 Hardwicke JT, Tan JJ, Foster MA, Titley OG. A systematic review of 2-strand versus multistrand core suture techniques and functional outcome after digital flexor tendon repair. *J Hand Surg Am* 2014;**39**:686–95.
20 Barrie KA, Tomak SL, Cholewicki J, Wolfe SW. The role of multiple strands and locking sutures on gap formation of flexor tendon repairs during cyclical loading. *J Hand Surg* 2000;**25A**:714-20.
21 Pruitt DL, Aoki M, Manske PR. Effect of 1 suture knot location on tensile strength after flexor tendon repair. J Hand Surg 1996; 21A: 969-73.
22 Trail IA, Powell ES, Noble J. An evaluation of suture materials used in tendon surgery. *J Hand Surg Br* 1989;**14**:422–7.
23 Iwuagwu FC, McGrouther DA. Early cellular response in tendon injury: The effect of loading. *Plast Reconstr Surg* 1998;**102**:2064–71.
24 Li F, Li B, Wang QM, Wang JH. Cell shape regulates collagen type I expression in human tendon fibroblasts. *Cell Motil Cytoskeleton* 2008;**65**:332–41.
25 Matthew C, Moore MJ, Campbell L. A quantitative ultrastructural study of collagen fibril formation in the healing extensor digitorum longus tendon of the rat. *J Hand Surg Br* 1987;**12**:313–20.
26 Connizzo BK, Yannascoli SM, Soslowsky LJ. Structurefunction relationships of postnatal tendon development: A parallel to healing. *Matrix Biol* 2013;**32**:106–16.
27 Chesney A, Chauhan A, Kattan A, Farrokhyar F, Thoma A. Systematic review of flexor tendon rehabilitation protocols in zone II of the hand. *Plast Reconstr Surg* 2011;**127**:1583–92.
28 Elliot D, Moiemen NS, Fleming AF, Harris SB, Foster AJ. The rupture rate of acute flexor tendon repairs mobilized by the controlled active motion regimen. *J Hand Surg Br* 1994;**19**:607.
29 Manske PR. Flexor tendon healing. *J Hand Surg Br* 1988;**13**:237.
30 Zhao C, Zobitz ME, Sun YL, Predmore KS, Amadio PC, An KN, Moran SL. Surface treatment with 5- fluorouracil after flexor tendon repair in a canine in vivo model. *J Bone Joint Surg Am* 2009;**91**:2673-82.

[Downloaded from wjps.ir on 2026-11-24]